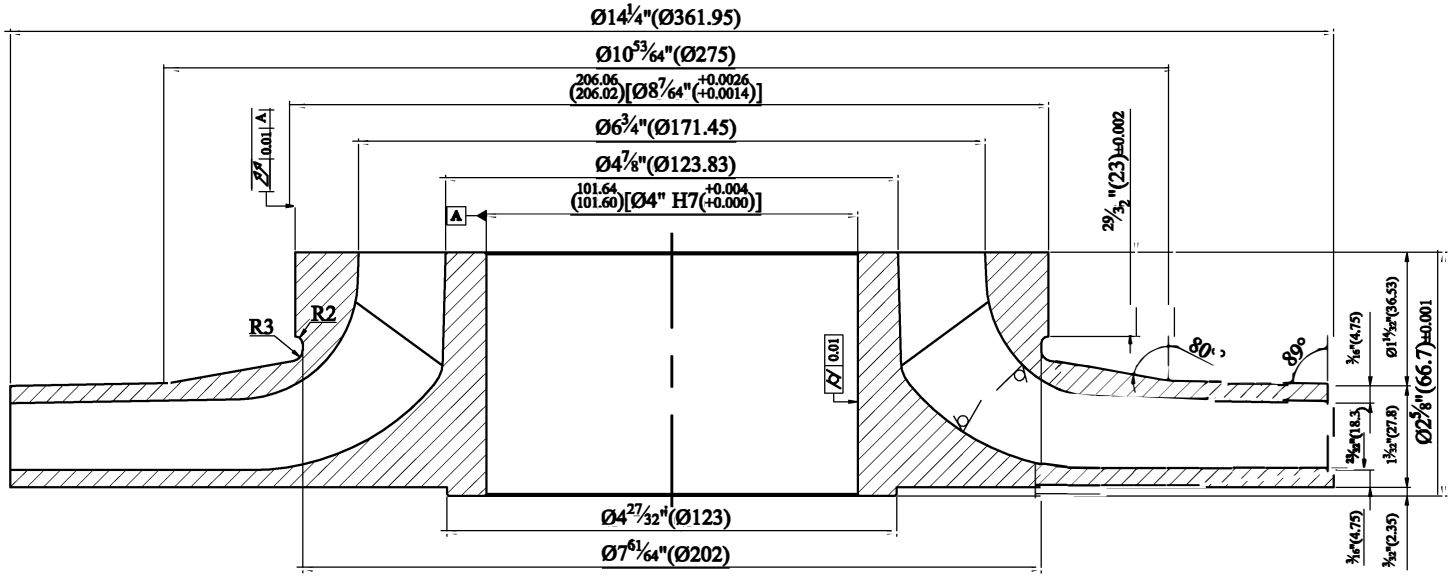

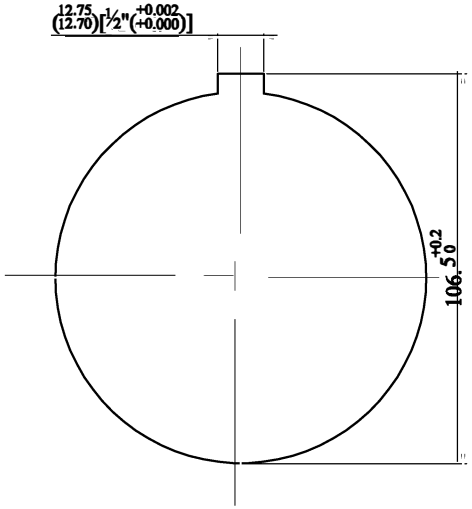

Note :

1-All dimensions are in mm unless otherwise.

2-All chamfers shall be 0.5x45° .

Qty.	Item No.	MESC No.	Part Name	Drawing No.	Edition
20	–	–	Impeller	–	1
Weight 14.7 kg	Referenced Documents Nos. –		Project Name	Material AISI 420	
Contractor:			Boiler Feed Pump	General Tolerances St. ISO 2768 mK	
Client:				Size A2	Scale 1:1

	Date	Name	No.	Revision	Position	Date	Name
Reverse Engineering	89/08		1				
Drawn	89/08						
Checked	89/08						
Approved	89/08						